Extension Board Changes

Abstract
Extension Board update from Rev 03A.

Version	Date	Changed by	Reason for change
01A	2018-05-19	Rolf Blixt	First version
02A	2018-05-24	Rolf Blixt	More info
03A	2018-10-16	Rolf Blixt	Changes after feedback from Johannes Wallin
D	2022-01-09	Rolf Blixt	Melacs modified to RS485 *RxEN select via old SPIclk. Older change 3&4 removed because no support for Gas kit. All signal names will soon be renamed to more general names so maybe better to type U1P1 names instead. Doc. name changed from REP-180005 rev 03A to MLC-2022-001 Rev D Modified PCBA will be **R5A**

Index

1 .... GENERAL 2
2 .... CHANGES OVERVIEW 2
3 .... CHANGES IN DETAIL 3
3.1..... CHANGE 1: SWITCH OF TD+ AND TD- IN RS485 3
3.2..... CHANGE 2: ENABLE/DISABLE SEND RS485 RX TO MELACS MISO 4
4 .... REFERENCES 6

1 GENERAL

- Extension Board has three 6-pin connectors:
  JP1 SPI connected to MELACS7 JP29 SPI for communication.
  JP8 ports for future accelerometer XYZ.
  JP14 for RS485 communication via special SPIdesign documented here
  Connected to MELACS7 R2A JP27 (With R2A MELACS7 MPU Board).
  (No interference with JP1 except MOSI & MISO)

  JP2 is a 9-pin programming connector also added completely different SPI port compared to JP1 on highest numbered pins, but never used.

- RS485 TD+ and - reversed will be fixed here.

- On the Extension Board and the MELACS Board we use the same MCU PIC32MX795F512L-80 and it has SPI ports with SPICLK, SPIMISO, SPIMOSI and Slave Select signal.

- On the MELACS7 Board all SPI ports use the same CLK, MOSI and MISO but different SS = Slave select so when RS485 communication is selected to Extension board via pins shared by the SPI port, no other communication is possible.

- An additional chip select (not only slave select) has to be added from MELACS to Extension board for RS485 communication.
  This is to handle read and write to RS485 separately.

- This Extension Board PCBA GN2004 update as below**:**

200 PCBAs GN2004 rev **03A**(PCB GN3004 03A) were manufactured by GELAB and needs manual changes that will be documented here.

PCB**A**s physically modified will be rev **R5A.** (PCBs will still have revison **03A**.) This document describes modification from PCBA 03A (not PCBA 04A because that board modification is not done OK according to this document doc rev 03A).

Future PCBAs modified in CAD with new PCBs will have higher rev than R5A. (Also PCB with higher revision than 03A.)

2 CHANGES OVERVIEW

Change 1&2 Wire changes only. (RS485)
NOTE Change 1 are to be implemented asap for R5A.

- Change 1: Switch of TD+ and TD- in RS485
  NOTE Change 2 are to be implemented asap for R5A
- Change 2: Change IO5 to pass RS485 signal instead of existing signal.

3 CHANGES IN DETAIL

3.1 CHANGE 1: SWITCH OF TD+ AND TD- IN RS485

TD+ and TD- mixed names.

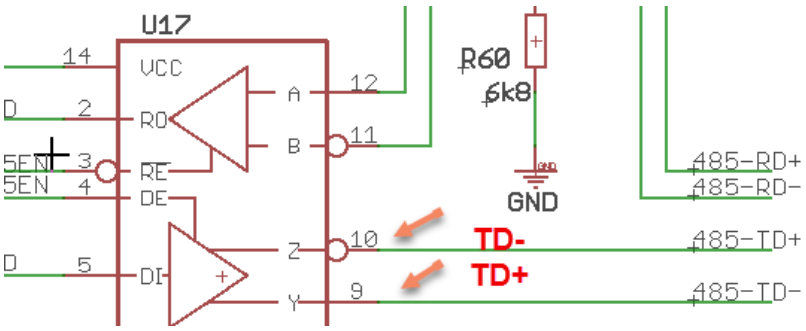

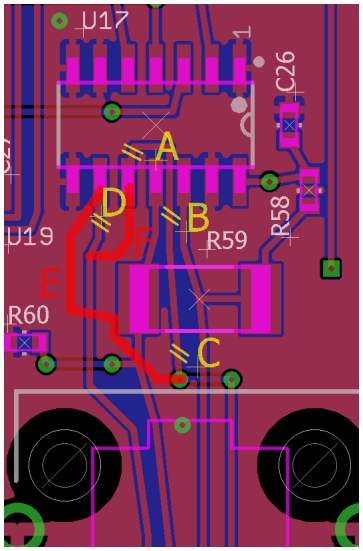

Switch place TD+ and TD-:

- Cut wire @ B (B is between U17P11 and U17P12)

(If U17 not mounted Cut wire @ A and C instead ,Two yellow parallell lines)

- Connect between U17P10 marked red F and to previous cut lead D.(Red line).

- Cut wire @ D (from U17P9 Two yellow parallell lines).
- Connect wire red E from U17P9(Red line) to hole close to previous C.

3.2 CHANGE 2: ENABLE/DISABLE SEND RS485 RX TO MELACS MISO .

Enable/Disable Send RS485 Rx to MELACS MISO is added but enable RS485 tx to MELACS MOSI was already in place before with ordinary Slave select JP14P2.
Rx and Tx has to be selected independently of each other.

~~Change 2: Change JP-IO5 = JP401P38 to pass RS485 signal instead of existing signal~~

~~Before this change the GKSV-signal were connected to/from both MELACS and the Extension Board. In this and future revisons GKSV will only be connected from the Extension Board. The previos named signal GKSV from MELACS will be renamed to *MEL_REC485EN and used for RS485 communication.~~
~~Yes it will also be renamed and connected as *MEL_REC485EN from MELACS IO5P2 3-pin connector to Cross-connection Board "JP5-IO5 to JP1P34(50pins) connector" and cable to Extension Board JP401P34~~

Gäller från – *Valid from*	Utfärdad av – *Prepared by*	Godkänd av – *Approved by*	Dokument nr – *Document no*
2022-01-09	Rolf Blixt 070-3730038	~~Stefan Mastonstråle~~	MLC-2022-001 Rev D

Dokument titel – *Document title*

Extension Board Design Changes

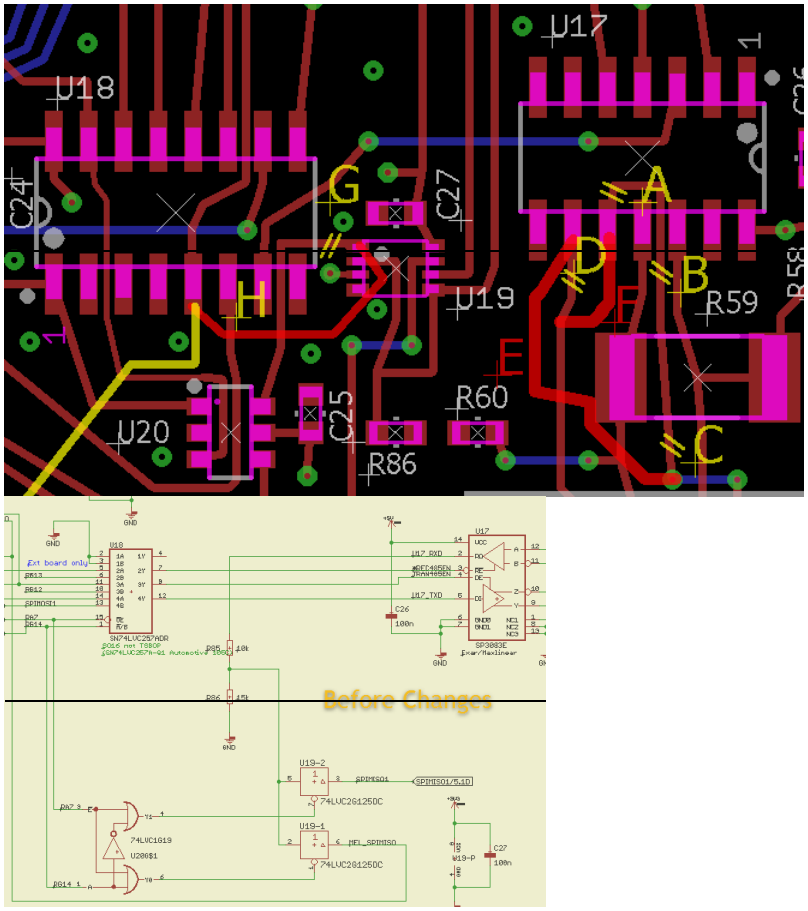

Cut lead @**G** from U19P1 to U20P6(Two yellow parallell lines //)

Connect @**H** U19P1 to U18P5(One red line) (Still MEL_SPICLK but other function)

Do **NOT** Cut JP14P3 @K so keep connection between JP14P3(MEL_SPICLK) and U18P5

Do **NOT** CUT @**M** JP401P34 to U16P4 (U16P4 should still connected to MCU U701P40) You can even cut the same wire @N to avoid disturbance.

Do **NOT** Connect @**L** JP401P34 to U18P5
(Previus GKSV_CTRL_BC now **NOT** changed to *MEL_REC485EN)
(So red crossed out text in fig to left sayeing *MEL_REC485 Ext B JP401P34= …) Should be removed but still there for backwards compability to old rev off this document and old R4A PCBA.

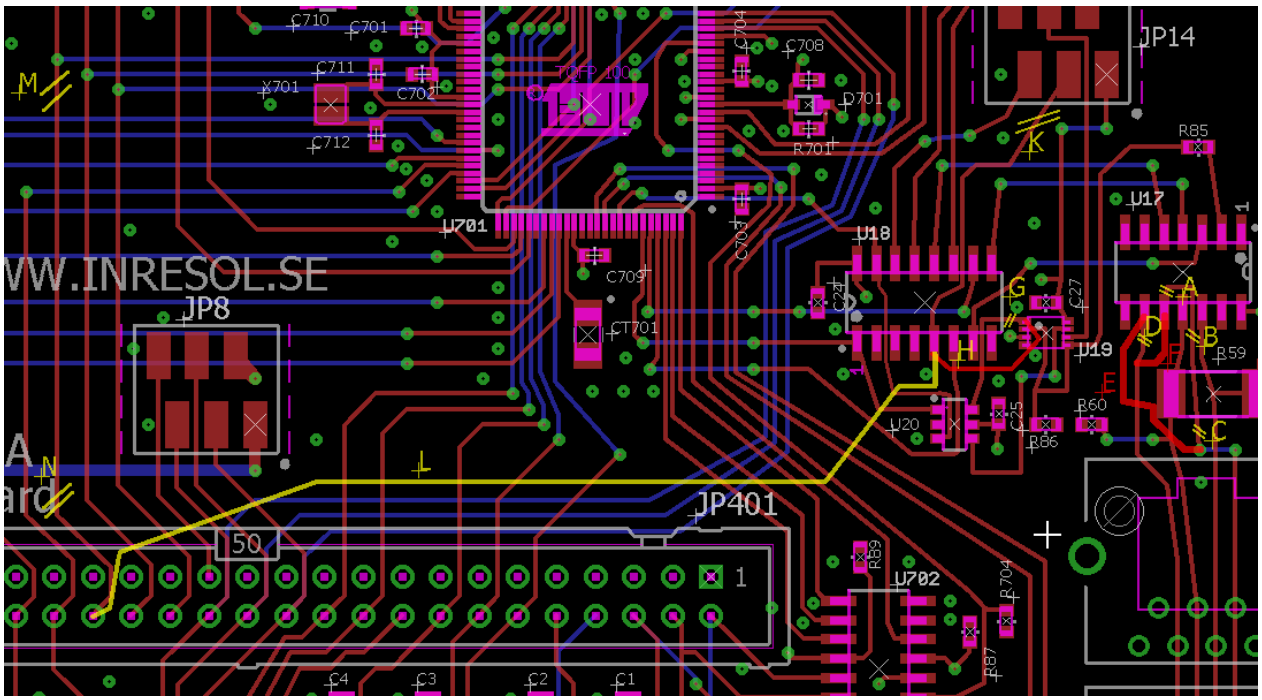

Below schema after change to R5A (Comments from R4A left for reference if some R4A has to be updated to R5A or newer)

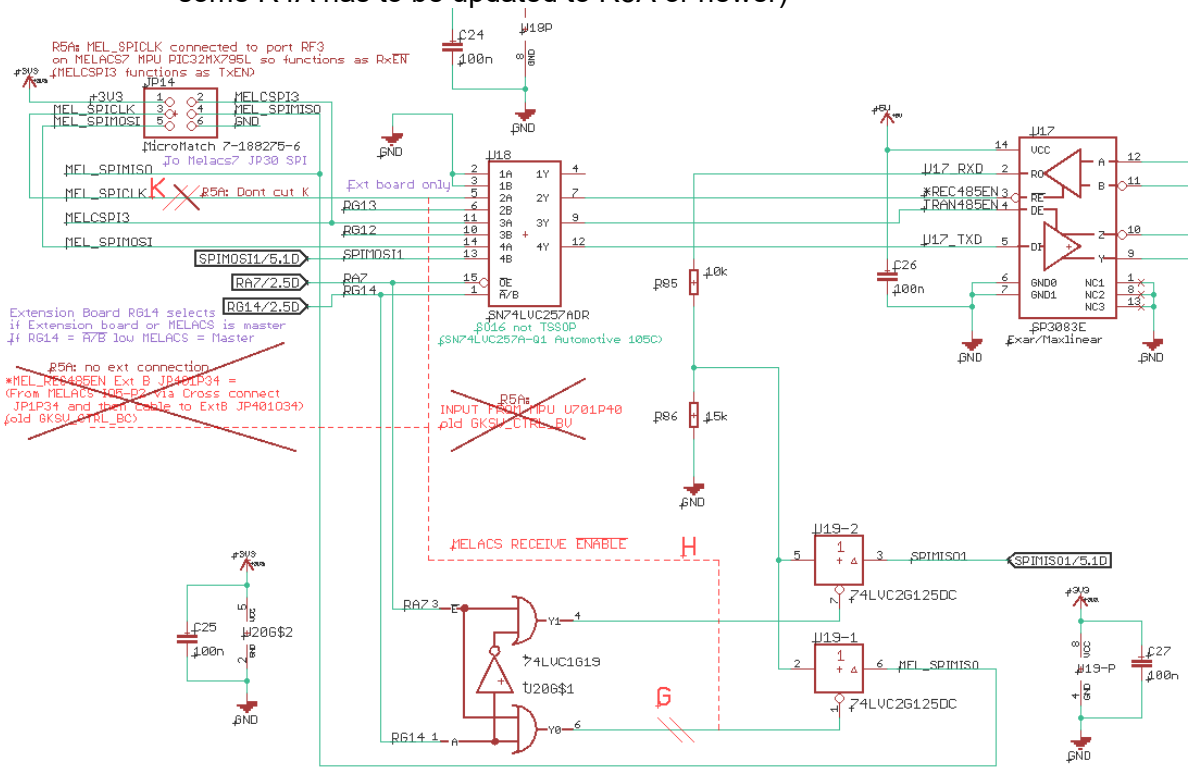

4 REFERENCES

PIC32MX795F512L-80 datasheets;